Operating Instruction 42/18-70-EN Rev. 04

SensyCal FCU400-IR
Contactless temperature monitoring system

Email:3007273136@qq.com
Tel:86-18050025540

Power and productivity
for a better world™

Contents

1 Safety ... 4
1.1 General information and notes for the reader ... 4
1.2 Intended use ... 4
1.3 Target groups and qualifications ... 4
1.4 Warranty provisions ... 4
1.5 Plates and symbols ... 5
1.5.1 Safety / warning symbols, note symbols ... 5
1.6 Name plate ... 5
1.7 Transport safety instructions ... 5
1.8 Storage conditions ... 5
1.9 Safety instructions for electrical installation ... 5
1.10 Safety instructions for operation ... 6
1.11 Returning devices ... 6
1.12 Integrated management system ... 6
1.13 Disposal ... 6
1.13.1 Information on WEEE Directive 2002/96/EC (Waste Electrical and Electronic Equipment) ... 6
1.13.2 RoHS Directive 2002/95/EC ... 6

2 General description ... 7
2.1 SensyCal FCU400-IR – Contactless temperature monitoring ... 7
2.1.1 Description ... 7
2.1.2 Properties ... 7
2.2 Operating principle of infrared sensors ... 7

3 Mounting ... 8
3.1 Operating conditions at installation site ... 8
3.2 Installing the infrared sensors ... 8
3.2.1 Selecting the measuring point ... 8
3.2.2 Installing the sensors ... 8
3.3 Installation in a panel ... 9

4 Electrical connections ... 10
4.1 General remarks ... 10
4.2 Installing extension modules ... 10
4.3 FCU400-IR ... 12
4.4 Connecting the infrared sensors ... 13

5 Commissioning ... 13
5.1 Checks prior to commissioning ... 13
5.2 Switching on the device ... 13

6 Operation ... 14
6.1 Menu navigation ... 14
6.2 Selecting and changing parameters ... 15
6.3 Safety levels ... 15

7 Configuration, parameterization ... 16
7.1 Parameter overview ... 16
7.2 Parameter descriptions ... 21
7.2.1 Menu: Start menu ... 21
7.2.2 Menu: Maximum temperature Tmx ... 21
7.2.3 Menu: Physical values ... 21
7.2.4 Menu: Electrical values ... 22
7.2.5 Menu: Error messages ... 22
7.2.6 Menu: Date/Time ... 23
7.2.7 Menu: Service ... 23
7.2.8 Menu: Data logger ... 24
7.2.9 Menu: Print tool ... 24
7.2.10 Menu: Tag name 1 ... 24
7.2.11 Menu: Device Data ... 25
7.2.12 Menu: Password ... 25
7.3 Parameterization software ... 26
7.3.1 Infrared printer ... 26

8 Error messages ... 27
8.1 Process errors ... 27
8.2 Device error ... 27

9 Technical Data ... 28
9.1 System structure ... 28
9.2 Electrical connections ... 28
9.2.1 Analog inputs ... 28
9.2.2 Digital outputs AB1, AB2, and Err ... 28
9.2.3 Communication interfaces ... 28
9.3 Power supply ... 28
9.4 Extension modules ... 28
9.5 Characteristic values ... 29
9.6 Ambient conditions ... 29
9.6.1 Electromagnetic compatibility (EMC) ... 29
9.7 Operation ... 29
9.7.1 Display ... 29
9.7.2 Billing date recording ... 29
9.7.3 Data logger ... 29
9.8 Error messages ... 29
9.8.1 Err error output ... 29
9.9 Mounting dimensions ... 29
9.10 Infrared sensors CS ... 30
9.10.1 General information ... 30
9.10.2 Measurement-related data ... 30
9.10.3 Electrical data ... 30
9.10.4 Declaration of conformity ... 30
9.10.5 Factory setting ... 30

10 Maintenance / Repair ... 31
10.1 Replacing the fuse ... 31
10.2 Cleaning the infrared sensors ... 31

11 Appendix ... 32
11.1 Approvals and certifications ... 32

Email: 1007273186@qq.com Tel:86-18054908410

1 Safety

1.1 General information and notes for the reader

You must read these instructions carefully prior to installing and commissioning the device.
These instructions are an important part of the product and must be kept for future reference.
These instructions are intended as an overview and do not contain detailed information on all designs for this product or every possible aspect of installation, operation and maintenance.
For additional information or if specific problems occur that are not discussed in these instructions, contact the manufacturer.
The content of these instructions is neither part of any previous or existing agreement, promise or legal relationship nor is it intended to change the same.
This product is built based on state-of-the-art technology and is operationally safe. It has been tested and left the factory in perfect working order from a safety perspective. The information in the manual must be observed and followed in order to maintain this state throughout the period of operation.
Modifications and repairs to the product may only be performed if expressly permitted by these instructions.
Only by observing all of the safety instructions and all safety / warning symbols in these instructions can optimum protection of both personnel and the environment, as well as safe and fault-free operation of the device, be ensured.
Information and symbols directly on the product must be observed. They may not be removed and must be fully legible at all times.

1.2 Intended use

Measurement computer for contactless temperature monitoring of contact points and circuit breakers on medium-voltage switchgear.
The measurement computer may not be operated in hazardous areas.
The device is designed for use exclusively within the stated values on the name plate and in the specifications (see "Specifications" chapter).

- The maximum operating temperature must not be exceeded.
- The permissible ambient temperature must not be exceeded.
- The housing's degree of protection must be observed during operation.

1.3 Target groups and qualifications

Installation, commissioning and maintenance of the product may only be performed by trained specialist personnel who have been authorized by the plant operator to do so. The specialist personnel must have read and understood the manual and comply with its instructions.
The operators must strictly observe the applicable national regulations with regards to installation, function tests, repairs, and maintenance of electrical products.

1.4 Warranty provisions

Using the device in a manner that does not fall within the scope of its intended use, disregarding this manual, using underqualified personnel, or making unauthorized alterations releases the manufacturer from liability for any resulting damage. This renders the manufacturer's warranty null and void.

Email:300[illegible]@qq.com
Tel:86-18050025[illegible]

1.5 Plates and symbols

1.5.1 Safety / warning symbols, note symbols

DANGER – Serious damage to health / risk to life
This symbol in conjunction with the signal word "DANGER" indicates an imminent danger. Failure to observe this safety information will result in death or severe injury.

DANGER – Serious damage to health / risk to life
This symbol in conjunction with the signal word "DANGER" indicates an imminent electrical hazard. Failure to observe this safety information will result in death or severe injury.

WARNING – Bodily injury
This symbol in conjunction with the signal word "WARNING" indicates a potentially dangerous situation. Failure to observe this safety information may result in death or severe injury.

WARNING – Bodily injury
This symbol in conjunction with the signal word "WARNING" indicates a potential electrical hazard. Failure to observe this safety information may result in death or severe injury.

CAUTION – Minor injuries
This symbol in conjunction with the signal word "CAUTION" indicates a potentially dangerous situation. Failure to observe this safety information may result in minor or moderate injury. The symbol may also be used for property damage warnings.

NOTICE – Property damage
This symbol indicates a potentially damaging situation.
Failure to observe this safety information may result in damage to or destruction of the product and / or other system components.

IMPORTANT (NOTE)
This symbol indicates operator tips, particularly useful information, or important information about the product or its further uses. The signal word "IMPORTANT (NOTE)" does not indicate a dangerous or harmful situation.

1.6 Name plate

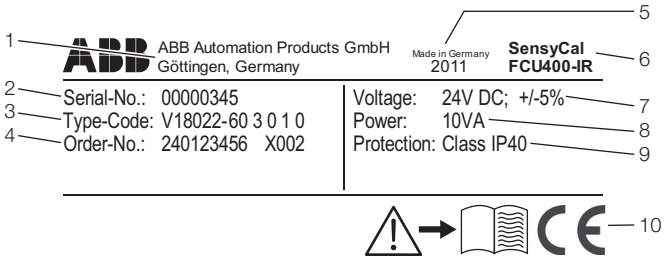

Fig. 1: Name plate
1 Manufacturer | 2 Serial number | 3 Order code | 4 Order number | 5 Year of manufacture, country of manufacture | 6 Full type designation | 7 Power supply | 8 Maximum power consumption | 9 Degree of protection | 10 CE mark

1.7 Transport safety instructions

Observe the following instructions:

- Do not expose the device to moisture during transport. Pack the device accordingly.
- Pack the device so that it is protected against vibrations during transport, e.g., by using air-cushioned packaging.

1.8 Storage conditions

The devices must be stored in dry and dust-free conditions.
The storage temperature should be between -25 °C (-13 °F) and 70 °C (158 °F).
In principle, the devices may be stored for an unlimited period. However, the warranty conditions stipulated in the order confirmation of the supplier apply.

1.9 Safety instructions for electrical installation

The electrical connection may only be established by authorized specialist personnel and in accordance with the connection diagrams.
The electrical connection information in the manual must be observed; otherwise, the type of electrical protection may be adversely affected.
Ground the measurement system according to requirements.

1.10 Safety instructions for operation

Before switching on the device, make sure that your installation complies with the environmental conditions listed in the chapter “Technical Data” or on the data sheet.
If there is a chance that safe operation is no longer possible, take the device out of operation and secure it against unintended startup.
Prior to installation, check the devices for possible damage that may have occurred as a result of improper transport. Details of any damage that has occurred in transit must be recorded on the transport documents. All claims for damages must be submitted to the shipper without delay and before installation.

1.11 Returning devices

Use the original packaging or a secure transport container of an appropriate type if you need to return the device for repair or recalibration purposes. Fill out the return form (see the Appendix) and include this with the device.
According to the EU Directive governing hazardous materials, the owner of hazardous waste is responsible for its disposal or must observe the following regulations for shipping purposes: All devices delivered to ABB must be free from any hazardous materials (acids, alkalis, solvents, etc.).

Please contact Customer Center Service acc. to page 2 for nearest service location.

1.12 Integrated management system

ABB Automation Products GmbH operates an integrated management system, consisting of:

- Quality management system to ISO 9001:2008
- Environmental management system to ISO 14001:2004
- Occupational health and safety management system to BS OHSAS 18001:2007 and
- Data and information protection management system

Environmental awareness is an important part of our company policy.
Our products and solutions are intended to have minimum impact on the environment and on people during manufacturing, storage, transport, use, and disposal.
This includes the environmentally-friendly use of natural resources. We conduct an open dialog with the public through our publications.

1.13 Disposal

This product is manufactured from materials that can be recycled by specialist recycling companies.

1.13.1 Information on WEEE Directive 2002/96/EC (Waste Electrical and Electronic Equipment)

This product is not subject to WEEE Directive 2002/96/EC or relevant national laws (e.g., ElektroG in Germany).
The product must be disposed of at a specialist recycling facility. Do not use municipal garbage collection points.
According to the WEEE Directive 2002/96/EC, only products used in private applications may be disposed of at municipal garbage collection points. Proper disposal prevents negative effects on people and the environment, and supports the reuse of valuable raw materials.
If it is not possible to dispose of old equipment properly, ABB Service can accept and dispose of returns for a fee.

1.13.2 RoHS Directive 2002/95/EC

With the Electrical and Electronic Equipment Act (ElektroG) in Germany, the European Directives 2002/96/EC (WEEE) and 2002/95/EC (RoHS) are translated into national law. ElektroG defines the products that are subject to regulated collection and disposal or reuse in the event of disposal or at the end of their service life. ElektroG also prohibits the marketing of electrical and electronic equipment that contains certain amounts of lead, cadmium, mercury, hexavalent chromium, polybrominated biphenyls (PBB), and polybrominated diphenyl ethers (PBDE) (also known as hazardous substances with restricted uses).
The products provided by ABB Automation Products GmbH do not fall within the current scope of regulations on hazardous substances with restricted uses or the directive on waste electrical and electronic equipment according to ElektroG. If the necessary components are available on the market at the right time, in the future these substances will no longer be used in new product development.

Email:2017273166@qq.com
Tel:86-18050815410

2 General description

2.1 SensyCal FCU400-IR – Contactless temperature monitoring

2.1.1 Description

The FCU400-IR is a complete system for contactless temperature monitoring at contact points and circuit breakers on MV switchgear. Loose screw connections and oxidation at the contact points between the busbars and at the circuit breakers lead to an increase in contact resistance. This causes power to be converted into heat energy, which in turn damages the system.

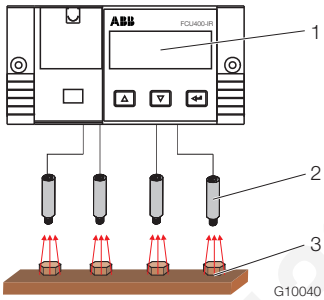

Fig. 2
1 FCU400-IR | 2 Pyrometer | 3 Measuring points

2.1.2 Properties

- Continuous temperature monitoring on live components
- Monitoring of up to 12 hotspots in switchgear using one system
- Freely-adjustable limit values for the pre-alarm and main alarm
- Analog output for maximum temperature value (optional)
- MODBUS output (optional)
- No PVC cables
- Full shielding of all components against electromagnetic disturbances
- Option of connecting a Pt100 temperature sensor for the purpose of measuring the ambient temperature
- M-Bus and optical interfaces (IRDA, ZVEI) for reading out data and configuration
- All necessary parameters displayed on a multi-line LCD display on site
- All measuring points and maximum temperatures displayed with measuring point identification in each case
- Data logger function with real-time clock for all temperatures and limit values
- If a limit value is exceeded, the error is stored together with the date and time
- Minimum adjustment work on site, plus excellent upgradeability (modular structure)

How you can benefit from using the FCU400-IR:

- Lower costs
- No expensive routine checks of contact points required
- No measuring system maintenance required
- Improved system safety
- No malfunctions thanks to fast online detection of hotspots and shutdown of switchgear
- Measuring system does not come into contact with live components

The system principally consists of the following components:

- Infrared pyrometer for hotspot monitoring in the busbar area
- Pt100 temperature sensor (optional) for measuring the ambient temperature in the busbar area
- Measurement computer for signal processing, evaluation, and display in secondary equipment area

Inputs	Maximal 12 x pyrometer
	1 x Pt100, measuring range 0 … 200 °C (32 … 392 °F)
Outputs	3 binary switching outputs (pre-alarm, alarm, and device error)
	1 MODBUS output (optional)
or alternatively	1 analog output (optional), 4 … 20 mA signal for maximum pyrometer temperature
Optical resolution of sensors	15:1
Length of sensor-measurement computer connecting cable	10 m (standard)
Response time of entire system	< 1 s
Reproducibility of temperature measurement	±0.75 °C or ±0.75 % of measured value (the larger value in each case applies)
Degree of protection	IP 40
Power supply	24 V DC ± 5 %
Maximum power consumption	10 VA
Maximum ambient temperature	Measurement computer: 55 °C (131 °F) Pyrometer: 70 °C (158 °F)

Additional technical details for the FCU400-IR available on request.

2.2 Operating principle of infrared sensors

Contactless temperature measurement is based on the principle that all bodies emit thermal radiation in relation to the temperatures of the bodies.
Infrared sensors are able to detect this incoming radiation and determine what level it is at.
The radiation level is used to gauge the temperature of the contact point or conductor.

Email: 3007273136@qq.com
Tel: 86-18050025540

3 Mounting

3.1 Operating conditions at installation site

IMPORTANT (NOTE)
Before installation, check whether the ambient conditions at the installation site are within the permissible limits.
See "Specifications" chapter.

3.2 Installing the infrared sensors

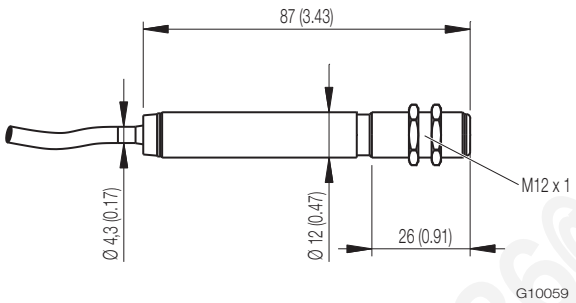

Fig. 3: Dimensions of infrared sensor CS in mm (inch)

The standard length of the connection cable is 10 m (32 ft). The infrared sensor is equipped with an M12 x 1 thread and can be installed either directly using this thread or with the aid of the two hexagon nuts on the installation equipment (at the customer's site).

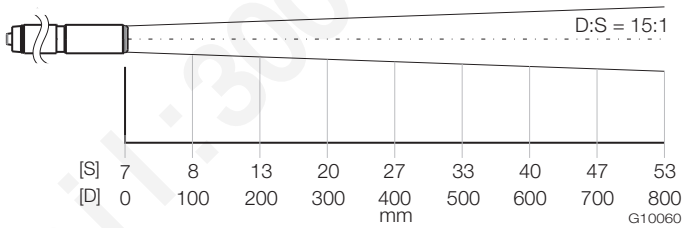

Fig. 4: Optical diagram in mm
S Measuring spot diameter in mm | D Distance in mm

The optical diagram shows the measuring spot diameter in relation to the distance. The measuring spot diameter relates to 90 % of the radiant energy. The distance is measured from the front edge of the sensor/lens holder or air purge.
The size of the object to be measured and the optical resolution of the infrared sensor determine the maximum distance between the infrared sensor and the object being measured.
To prevent measuring errors, the object being measured must fill the entire measuring spot. The measuring spot must be smaller than or the same size as the object being measured.

IMPORTANT (NOTE)
The control cabinet and infrared sensor housing must be at the same electric potential.

3.2.1 Selecting the measuring point

Please observe the following information when selecting the measuring point:

- Make sure that the necessary isolation distance is maintained between the object being measured and the sensor.
- Make sure that the object being measured completely fills the measuring spot of the sensor (refer to optical diagram).
- Make sure that reflected ambient radiance will not lead to erroneous measurement results.

NOTICE – Impaired sensor function!
Impaired sensor function due to ambient radiance being reflected on bare metal surfaces. Make sure that the object being measured is varnished or has a plastic coating. All varnishes except for metallic ones are suitable for varnishing.

3.2.2 Installing the sensors

NOTICE – Damage to sensors!
Damage to sensors due to improper installation.

- Only attach sensors using the thread intended for them.
- Do not subject the sensors to high levels of mechanical force during installation.

1. Create a fixing hole in the installation equipment (at the customer's site).
2. Insert the sensor in the hole and secure it using the two hexagon nuts. Alternatively, the sensor can be screwed directly into a M12 x 1 tap hole.
3. Lay the sensor connection cables in suitable cable ducts for the FCU400-IR measurement computer.
4. Connect the connection cables to the measurement computer in accordance with the connection diagrams.

Email:3007273136@qq.com Tel:86-18050025540

3.3 Installation in a panel

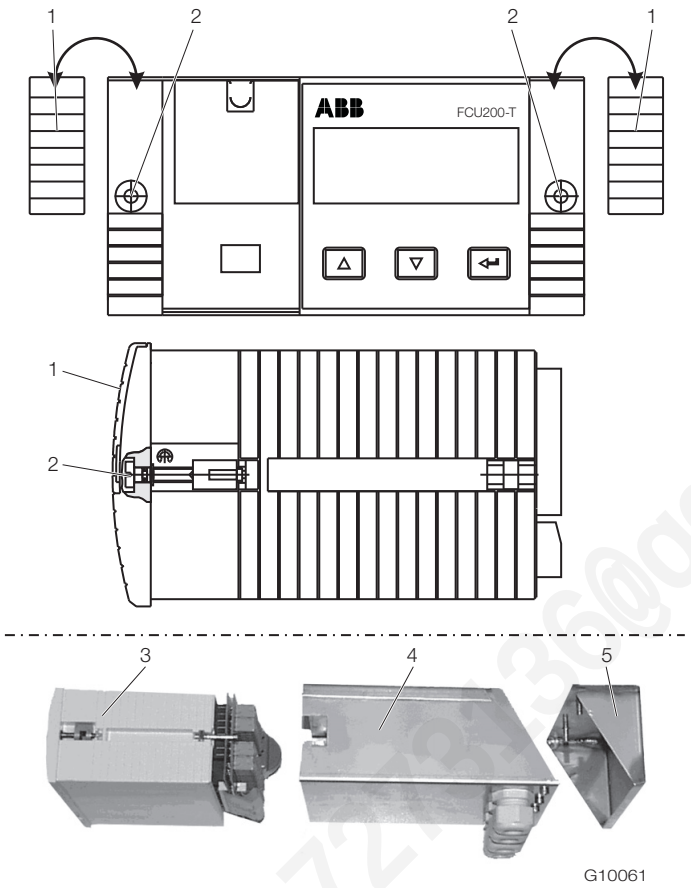

Fig. 5: Installation in panel
1 Cover | 2 Fixing screw | 3 Measurement computer | 4 EMC protective housing | 5 Rear panel housing

1. If one if not already present, create a panel cutout measuring (width x height) 139 mm x 69 mm (5.47 inch x 2.72 inch).
2. Remove the covers on both sides.
3. Insert the device in the panel cutout from the front and secure it using the fixing screws.
4. Replace the covers on both sides.
5. Push the EMC protective housing onto the device from the rear.
6. Guide the connection lines for the sensors, signals, and power supply through the cable glands and into the base (around 50 mm (approx. 2 inch) of the lines need to be in the base in order to connect them).
7. Establish the electrical connections for the device (see "Electrical connections" chapter).
8. Screw the rear panel housing onto the back of the measurement computer using fixing screws.
9. Establish the potential equalization for the control cabinet.

Email:3007291536@qq.com
Tel:86-18050025540

4 Electrical connections

4.1 General remarks

Please observe the following points:

- The line voltage and current consumption are indicated on the name plate for the measurement computer.
- A circuit breaker with a maximum rated current of 16 A must be installed in the power supply lead of the measurement computer.
- The wire cross-section of the power supply lead and the circuit breaker used must comply with VDE 0100 and must be dimensioned in accordance with the current consumption of the measurement computer. The leads must comply with IEC 227 and/or IEC 245.
- The circuit breaker should be located near the measurement computer and marked as belonging to the device.
- A suitable line switch must also be installed within reach of the installation location. The line switch must be capable of fully isolating the measurement computer from the power supply (all poles; L, N). The protective conductor must not be isolated.
- Please remember that there is a voltage drop associated with long lead lengths and small lead cross-sections. The voltage at the terminals of the device may not fall below the minimum value required.
- Complete the electrical connection according to the connection diagram.

4.2 Installing extension modules

WARNING – Live connections!
Risk due to exposed live connections when device is open.

- Before opening the device, switch off the power supply.
- Condensers in the device will be live even after the power supply has been switched off.
- Only suitably trained specialist personnel may carry out work on the device.

NOTICE – Potential damage to device!
Damage to device due to static electricity (ESD). Make sure that ESD protection measures are in place when working on the device.

IMPORTANT (NOTE)
To install extension modules, the device calibration seal must be broken.

The extension modules are inserted in the slots on the main board.

Module	Slot 1	2	3	4
107 4 x voltage inputs (EX1 … EX4, only in the case of FCU400-IR)	X	X	X	-
102 2 x analog outputs (AX1 … AX2), 2 x limit monitors (ABX1 … ABX2)	-	-	-	X
105 RS485 / RS232 card (Modbus)	-	-	-	X

Email:3007261360@qq.com
Tel:86-18050025540

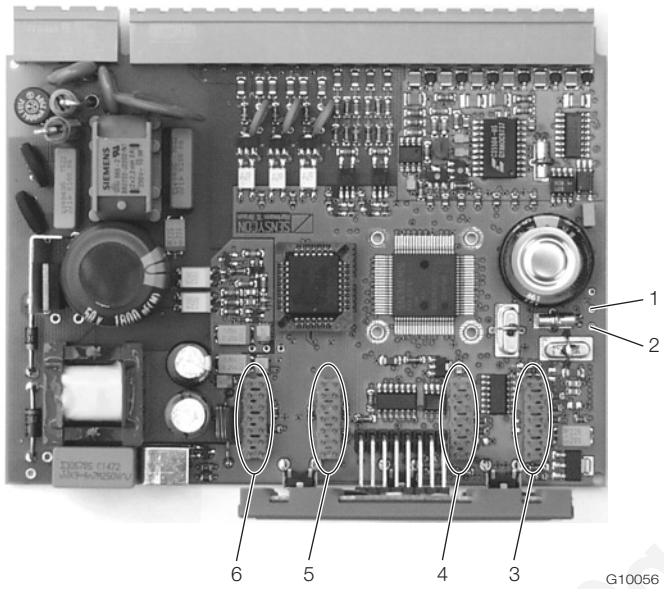

Fig. 6: Slot positions
1 RxD soldering point (red) | 2 TxD soldering point (green) | 3 Slot 1 | 4 Slot 2 | 5 Slot 3 | 6 Slot 4

1. Switch off and remove the device.
2. Separate the device from the base (only in the case of DIN top-hat rail installation).
3. Unscrew the fixing screws from the rear panel and remove the rear panel.
4. Pull out the main board.
5. Insert the extension module in the corresponding slot on the main board.

IMPORTANT (NOTE)
When installing extension module 105 (RS485/232 interface), the signal lines of the extension module must be soldered to points RxD / TxD on the main board.

6. Make an appropriate aperture in the rear panel.
7. Insert the main board together with the extension module in the housing.
8. Replace the rear panel and screw it in place.
9. Place the measurement computer on the base and secure it using the fixing screws (only in the case of DIN top-hat rail installation).
10. Install the device and connect the extension module.
11. Commission the device.

Email:3007273136@qq.com
Tel:86-18050025540

4.3 FCU400-IR

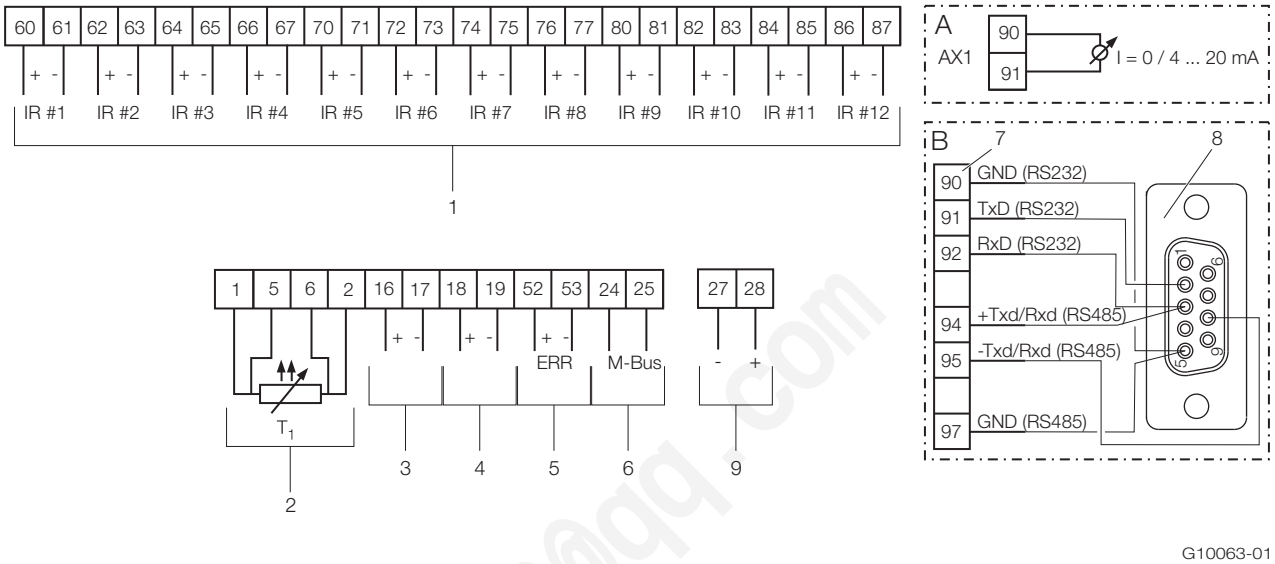

Fig. 7: FCU400-IR connection diagram
A Current output extension module | B RS232 / RS485 (Modbus) interface extension module
1 Inputs for infrared sensors (1 ... 12) | 2 Input for ambient temperature sensor | 3 Alarm output | 4 Alarm output (pre-alarm) | 5 Error output | 6 Interface (M-Bus) | 7 Power supply

IMPORTANT (NOTE)

Extension slots 1, 2, and 3 are already occupied by the IR sensor inputs. The current output and interface extension modules are installed in slot 4. Only one extension module can be installed at any given time (i.e., either the current output or the interface extension module).

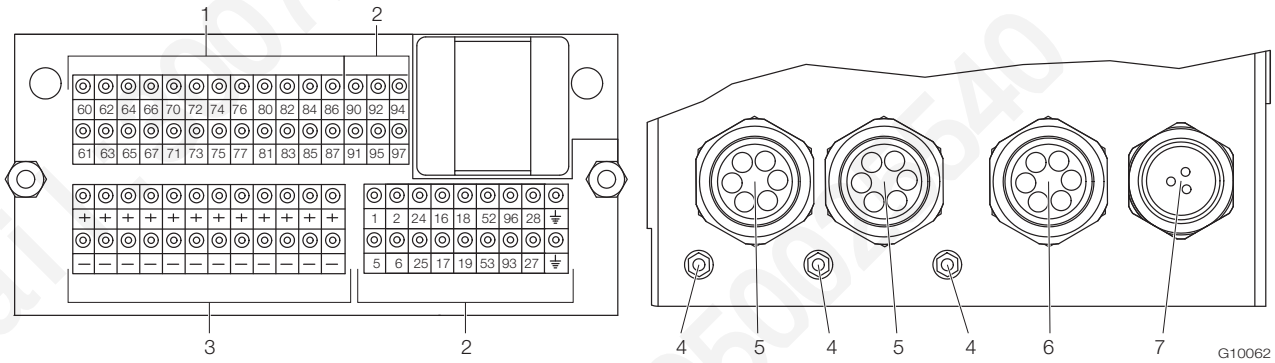

Fig. 8: Positions of the terminals and cable entries
1 Terminals for infrared sensors | 2 Terminals for measurement computer input / output signals | 3 Terminals for power supply of infrared sensors | 4 Ground terminals (GND) | 5 6-division cable gland for infrared sensors | 6 6-division cable gland for M-Bus, temperature sensor, and alarm signals | 7 3-division cable gland for power supply

The terminals shown at (3) are used for the power supply of the infrared sensors.
The cable entries are located on the underside of the EMC protective housing. The cable entry assignments shown in Fig. 8 are a recommendation.

Email: 00727315@qq.com
Tel: 86-18050025540

4.4 Connecting the infrared sensors

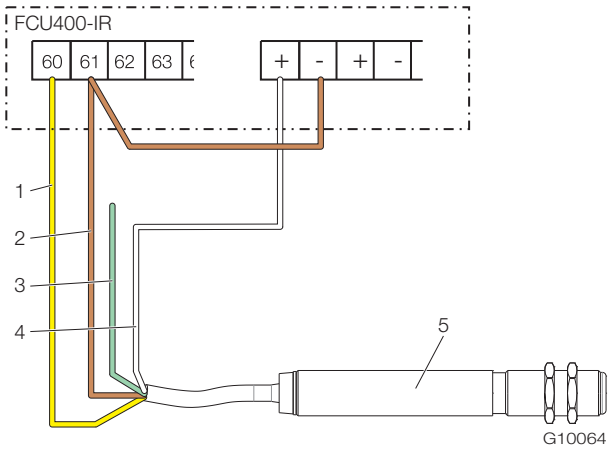

Fig. 9: Connection example, infrared sensor
1 Yellow (OUT) | 2 Brown (GND) | 3 Green (IN, not assigned) | 4 White (+24V DC) | 5 Infrared sensor

1. Remove approx. 150 mm (5.9 inch) of the sensor connection cable sheath.
2. Connect the sensors to the measurement computer as shown. The green wire is not connected and must, therefore, be isolated.

IMPORTANT (NOTE)
The output impedance of the infrared sensors must be ≥ 10 kΩ.

5 Commissioning

5.1 Checks prior to commissioning

Before switching on the device for the first time, check the following:

— Make sure that the measurement computer has been installed correctly.
— Make sure that all electrical connections have been established correctly.
— Make sure that the power supply for the measurement computer matches the specifications (voltage, frequency) on the name plate of the measurement computer.

5.2 Switching on the device

1. Switch on the power supply.

The start menu appears on the LCD display when the power supply is switched on.

2. Select the "Date / Time" menu and set the current date and time. Please observe the information in the "Operation" and "Parameterization" chapters.
3. Select the required process display (counter, physical values, electrical values, etc.).

Email:3007273136@qq.com
Tel:86-18050025540

6 Operation

6.1 Menu navigation

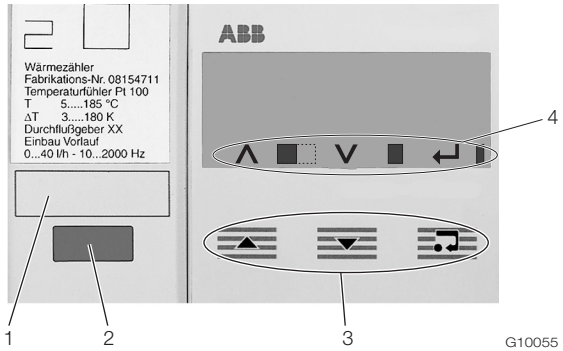

Fig. 10: LCD display

1 Label area | 2 Optical data interface | 3 Operating buttons for menu navigation | 4 Toolbar

Toolbar

The toolbar displays device functions and messages in the form of various icons.

Symbol	Meaning
^	Function "Increment value" active for operating button .
■	Device is operating if the width of the icon is constantly changing.
v	Function "Increment value" active for operating button .
■	Error messages present.
↵	Function "Enter" active for operating button .
▮	Write access to EEPROM.

Control button functions

You can use the or operating buttons to browse through the menu or select/change a number or character within a parameter value.

Depending on your position in the menu, the operating buttons may have other functions.

Symbol	Meaning
	— Go back one submenu — Increase numerical values (increment, in conjunction with icon ^) — Select the next position for entering numerical and alphanumeric values
	— Go forward one submenu — Decrease numerical values (decrement, in conjunction with icon v) — Select the previous position for entering numerical and alphanumeric values
	— Call up submenu — Select parameter value for changing purposes — Confirm parameter value — Exit submenu

Email:1007281360@qq.com
Tel:86-18050025540

6.2 Selecting and changing parameters

The device parameters are set by means of the FCOM200 parameterization software (ParaTool).
Only a few basic parameters (date / time, bus address, password, etc.) can be set on the device itself.

Numerical entry

When a numerical entry is made, a value is set by entering the individual decimal positions.

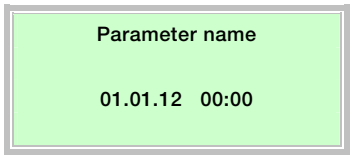

1. Select the parameters you want to set in the menu.
2. Use to call up the parameter for editing. The first digit is shown flashing.

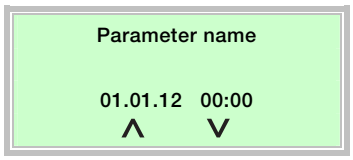

3. Use or to set the required value.
4. Use to select the next decimal position.
5. If necessary, select and set other decimal positions using the same procedure as described in steps 3 and 4.
6. Use to confirm your settings.

This concludes the procedure for changing a parameter value.

Choosing between several options

When presented with several options, you can scroll through them by pressing repeatedly.

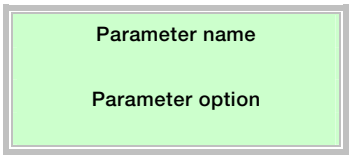

1. Select the parameters you want to set in the menu.
2. You can select the required parameter option by pressing repeatedly.
3. Use to confirm the setting and proceed to the next submenu.

Returning to the main menu

If nothing more is available in the submenu, "End of submenu" is shown on the LCD display.

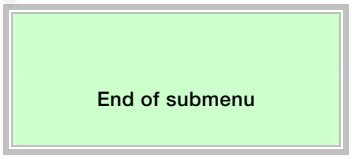

Use to call up the main menu.

6.3 Safety levels

The measurement computer parameters are protected against unauthorized access by means of various safety levels.
The safety level that is currently active is displayed in "Service / Status menu".

Level	Name	Description
S1	Fabrication	For Production and Service only.
S3	Password locked	Some menus and parameters can only be accessed once the password has been entered.
S4	Free	All menus and parameters can be accessed.

The password is entered in the "Password" menu.

Email:3007273136@qq.com
Tel:86-18050025540

7 Configuration, parameterization

7.1 Parameter overview

IMPORTANT (NOTE)
This overview of parameters shows all the menus and parameters available on the device. Depending on the version and configuration of the device, not all of the menus and parameters may be visible on it.

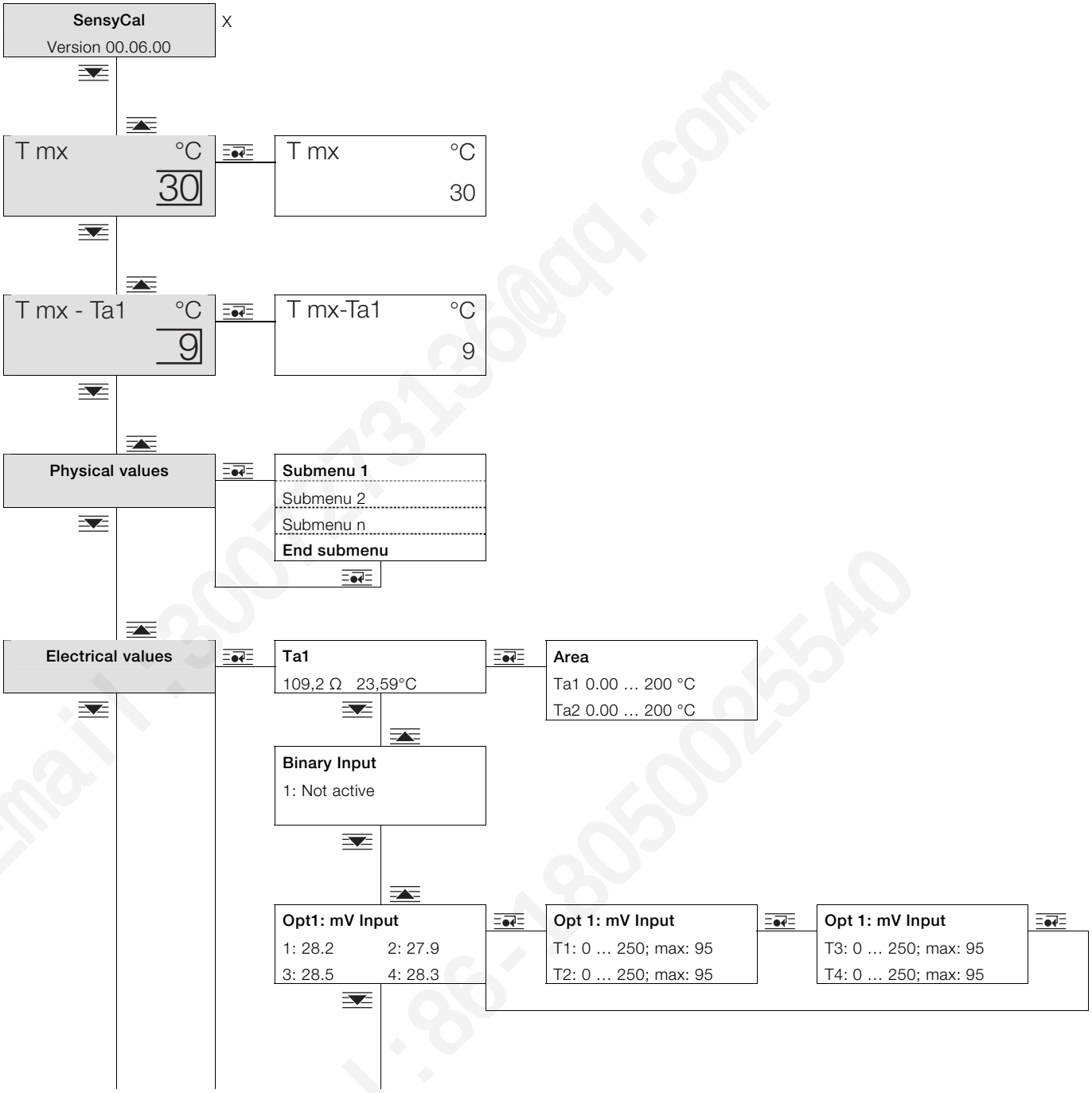

Email:1800731350@qq.com
Tel:86-18050025540

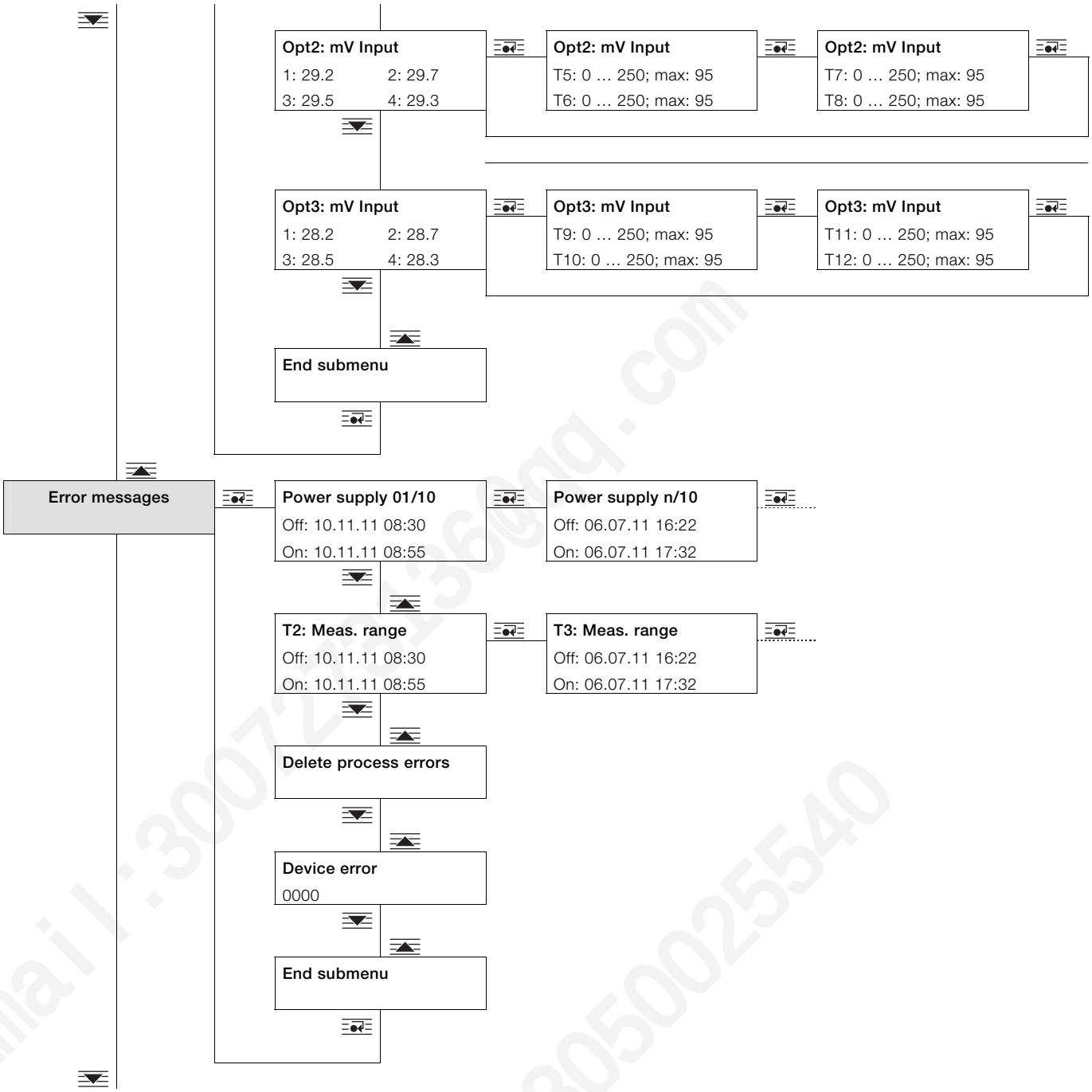

Email:3007215360@qq.com
Tel:86-18050025540

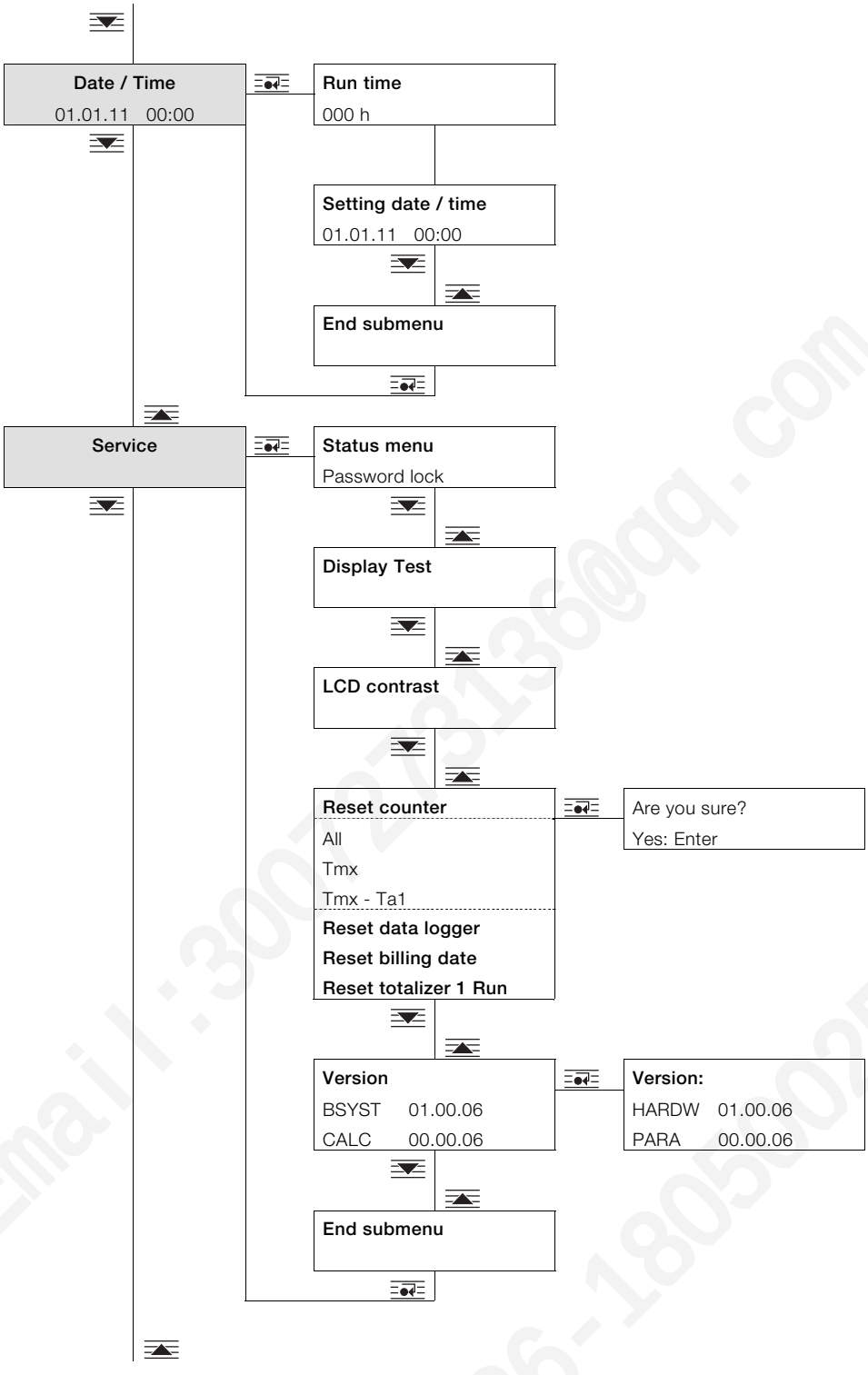

Email:3007723136@qq.com
Tel:86-18050025540

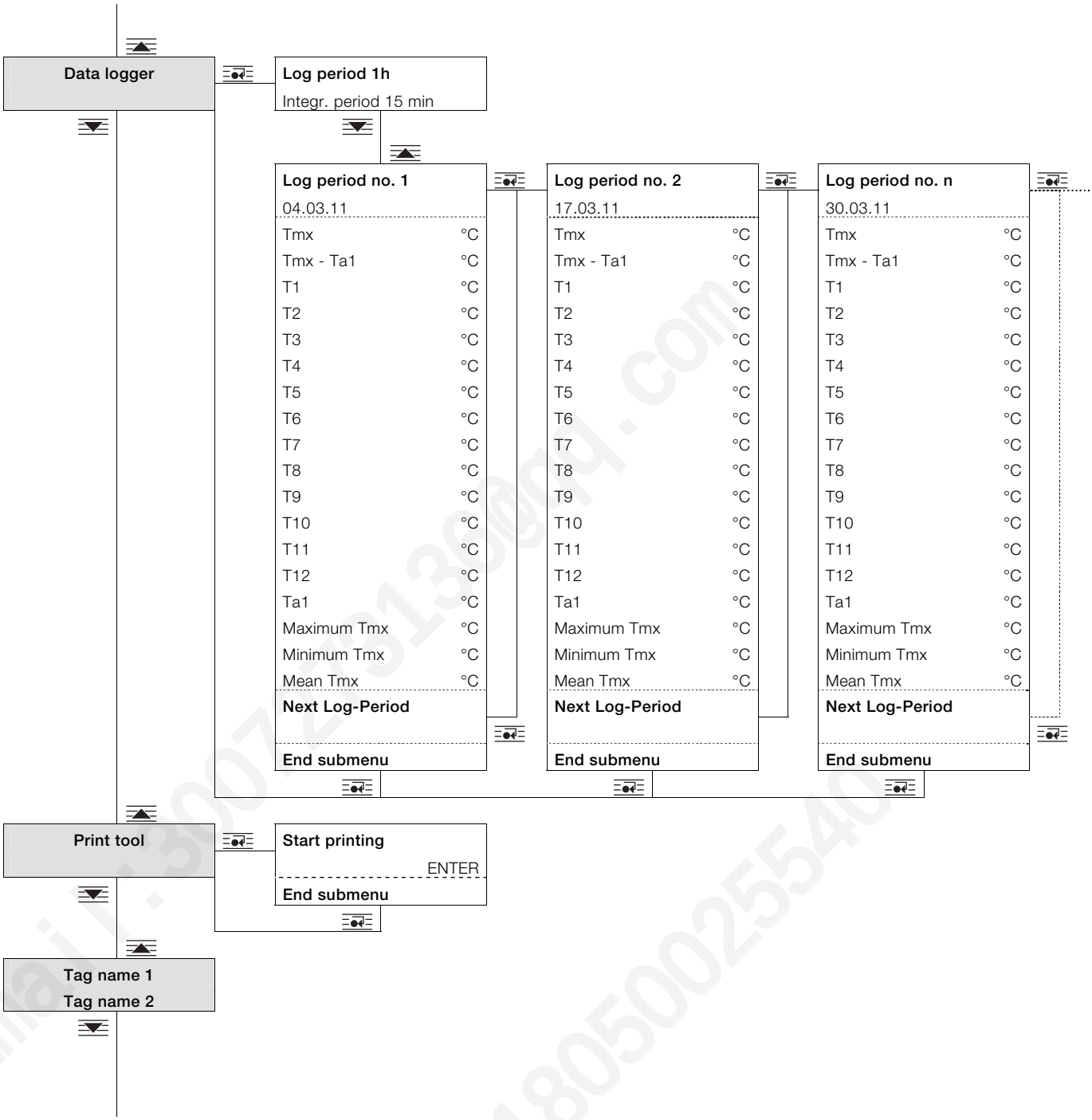

Email:3007231300@qq.com
Tel:86-18050025540

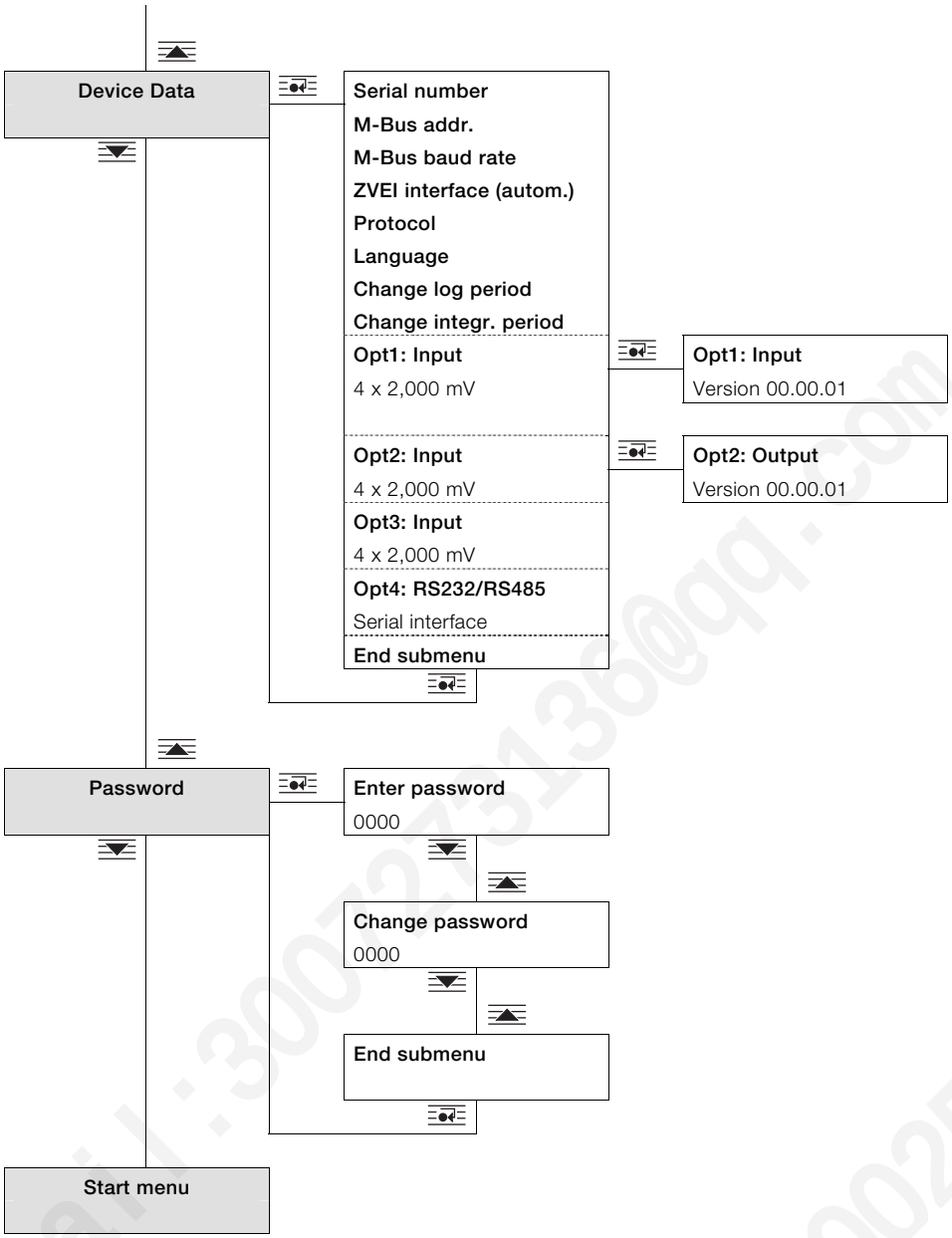

Email:3007273136@qq.com
Tel:86-18050025540

7.2 Parameter descriptions

7.2.1 Menu: Start menu

... / Start menu

Menu / Parameter	Value range	Description
FCU400-IR Version 03.05.21	-	The start menu appears on the LCD display when the device is switched on. The first line shows the device name and the second line the software version.

7.2.2 Menu: Maximum temperature Tmx

... / Maximum temperature Tmx

Menu / Parameter	Value range	Description
T mx °C 30	Standard	Displays the current highest measured temperature of infrared sensors 1 … 12. If the temperature becomes too large for the standard display, the system automatically switches to an expanded display with smaller numbers. Alternatively, you can use to switch to the expanded display manually.
T mx °C 30	Expanded, with small numbers	

The display is configured using the parameterization software.

7.2.3 Menu: Physical values

... / Physical values

Menu / Parameter	Value range	Description
Submenu 1 Submenu 2 … Submenu n	°C	Displays all physical input and output values, plus the process variables calculated by the measurement computer. The following values are displayed: — Current maximum temperature with measuring point identification (T01 … T12) — Current temperatures of infrared sensors 1 … 12; sensor inputs that are not assigned are labeled "inactive". — Ambient temperature Ta1

Email:3007273136@qq.com
Tel:86-18050025540

7.2.4 Menu: Electrical values

Displays all input and output signals.
The number of submenus available, and the type and number of signals displayed, depend on the device version and configuration settings.

... / Electrical values

Menu / Parameter	Value range	Description
Ta1	Ω, °C	Displays ambient temperature of temperature sensor input 1 (Pt100).
		Select the way in which the configured measuring ranges for temperature sensor input 1 are displayed.
Binary Input	1: Not active	Not used for FCU400-IR.
Opt1: 4 x mV Input	mV	Displays the current measured values of extension module 107 (4 x voltage inputs) in slot 1.
	1x	Displays configured measuring ranges for inputs 1 and 2 of extension module in slot 1.
	2x	Displays configured measuring ranges for inputs 3 and 4 of extension module in slot 1.
Opt2: 4 x mV Input	mV	Displays the current measured values of extension module 107 (4 x voltage inputs) in slot 2.
	1x	Displays configured measuring ranges for inputs 1 and 2 of extension module in slot 2.
	2x	Displays configured measuring ranges for inputs 3 and 4 of extension module in slot 2.
Opt3: 4 x mV Input	mV	Displays the current measured values of extension module 107 (4 x voltage inputs) in slot 3.
	1x	Displays configured measuring ranges for inputs 1 and 2 of extension module in slot 3.
	2x	Displays configured measuring ranges for inputs 3 and 4 of extension module in slot 3.
Opt4: mA Output	mA	Displays the current output values of extension module 102 (2 x current outputs) in slot 4.
	1x	Displays configured measuring range for current output 1 of extension module in slot 4.
	2x	Displays configured measuring range for current output 2 of extension module in slot 4.
End submenu		Back to main menu item "Electrical values".

7.2.5 Menu: Error messages

Displays device error messages.
For more detailed information about the error messages, refer to the "Error messages" chapter.

... / Error messages

Menu / Parameter	Value range	Description
Power supply 01/10 Off Date Time On Date Time	-	Displays the most recent failure and restoration of power supply together with date / time. The 10 most recent failures are stored.
		Select the previous power supply failures (2 … 10).
Process errors Off Date Time On Date Time	-	Displays the most recent process error and error resolution information (if it was resolved), plus the date / time the error occurred. The 10 most recent process errors are stored.
		Select the previous process errors (2 … 10).
Confirm process al. [1)]		Deletes the process errors (after confirmation of the prompt using).
Device error 0000	Binary-coded	Displays the internal device errors. The errors are displayed in binary-coded format.
End submenu		Back to main menu item "Error messages".

1) Safety level S3: Submenu can be accessed once the password has been entered.

7.2.6 Menu: Date/Time

... / Date/Time

Menu / Parameter	Value range	Description
Running time 0000h	h	Displays the operating hours.
Date/Time setup [1] 00.00.00 00:00	dd.mm.yy, hh:mm	Date and time setting (numerical entry).
End submenu		Back to main menu item "Date / Time".

1) Safety level S3: Submenu can be accessed once the password has been entered.

7.2.7 Menu: Service

... / Service

Menu / Parameter	Value range	Description
Status menu [1]	Free, Fabrication, Password locked	Displays the active safety level (S1 … S4). — Fabrication (S1): As with "Free", except that additional menus and parameters for Production and Service can be accessed. — Password locked (S3): All customer-related parameters can be changed once the password has been entered. — Free (S4): All parameters can be changed. This menu can be accessed once the password has been entered in the "Password" menu. The status displayed is then "Free". If no password is entered, it will not be possible to access the subsequent submenu items.
Display Test [1]		Activates the display test.
LCD contrast [1]	1 … 15	Display contrast setting (selected from several options).
Reset counter		Not used for FCU400-IR.
Reset data logger		Not used for FCU400-IR.
Reset counter 1 Run [1]		Not used for FCU400-IR.
End submenu		Back to main menu item "Service".

1) Safety level S3: Submenu can be accessed once the password has been entered.

Email:8001273126@qq.com
Tel:86-18050025540

7.2.8 Menu: Data logger

The data logger stores a range of process variables together with the date and time. The data sets are stored in a ring buffer containing 200 slots. If all the slots are occupied, the oldest entry in each case is overwritten. A storage interval (log period) between 1 hour and 3 months can be configured.

... / Data logger

Menu / Parameter	Value range	Description
Log period 1h Integr. period 15 min	-	Displays the configured log period and the integration time for calculating minimum, maximum, and average values. The values can be set in the "Device Data" menu.
Log period no. 1 … n 00.00.00 00:00	-	Displays the log period that is currently selected, together with the time stamp.
		Switches to the next log period.
Data display	-	Displays the data for the log period that is currently selected. The following data is stored: — The current highest measured temperature (Tmx) of infrared sensors 1 … 12 together with the time and date. — Current temperature difference (Tmx - Ta1) together with the time and date. — Current measured values of infrared sensors 1 … 12 at the time when the data logger stored the data. — Current ambient temperature (Ta1, Ta2) at the time when the data logger stored the data. — Maximum value of Tmx within log period together with time and date. — Minimum value of Tmx within log period together with time and date. — Mean value of Tmx within log period together with time and date.
Next Log-Period		Switches to the next log period.
End submenu		Back to main menu item "Data logger".

7.2.9 Menu: Print tool

The print function is used to output current data to a printer via the infrared interface.

... / Print tool

Menu / Parameter	Value range	Description
Start printing Enter		Outputs the current data via the infrared interface. The following data is output: — Serial number — Date and time — Current measured values of infrared sensors 1 … 12 — Maximum temperature (Tmx) — Ambient temperature (Ta1)
End submenu		Back to main menu item "Print tool".

7.2.10 Menu: Tag name 1

... / Tag name 1

Menu / Parameter	Value range	Description
Tag name 1 Tag name 1	Alphanumeric, max. 20 characters.	Displays the configured measuring point identification. The text can only be entered using the parameterization software.

7.2.11 Menu: Device Data

... / Device Data

Menu / Parameter	Value range	Description
Fabrication number	-	Displays the serial number of the measurement computer.
M-Bus addr. [1]	0 … 250	M-Bus interface bus address setting (selected from several options).
M-Bus baud rate [1]	300, 600, 1200, 2400, 4800, 9600, 19200, 38400	M-Bus interface bus baud rate setting (selected from several options).
Interface [1]	Automatic, optical head M-Bus repeater, RS232, RS485	Interface type setting (selected from several options).
Protocol	M-Bus, Modbus, Modbus (pair of reg)	Interface protocol setting (selected from several options). This setting may not be changed!
Language	English, French, German	LCD display language setting (selected from several options).
Log period	1, 2, 3, 4, 6, 8, 12 h 1, 2, 3, 4, 5, 6, 7, 10 days 1, 2, 3 months	Log period setting for data logger (selected from several options).
Integr. period	15, 30, 45, 60, 75, 90, 105, 120 min	Integration time setting for min. / max. and mean value calculation of data logger (selected from several options).
Opt: 1	-	Displays type of extension module in slot 1.
		Displays hardware/software version of extension module in slot 1.
Opt: 2	-	Displays type of extension module in slot 2.
		Displays hardware/software version of extension module in slot 1.
Opt: 3	-	Displays type of extension module in slot 3.
Opt: 4	-	Displays type of extension module in slot 4.
End submenu		Back to main menu item "Device Data".

1) Safety level S3: Submenu can be accessed once the password has been entered.

7.2.12 Menu: Password

The device can be protected with a password. If a password is active, this means that parameters may only be changed once the password has been entered.

... / Password

Menu / Parameter	Value range	Description
Enter password	0000 (4-digit)	Enter password (0000 = enable, no password active).
Change password	0000 (4-digit)	Change password (numerical entry).
End of submenu		Back to main menu item "Device Data".

IMPORTANT (NOTE)

Once parameters have been changed, the password needs to be reactivated:

— By entering the password again

— By selecting "Password locked" in "Service / Status menu".

Email:3007273136@qq.com
Tel:86-18050025540

7.3 Parameterization software

The FCOM200 PC parameterization software (ParaTool) is used for setting parameters in standard applications.
The software can be installed and used on standard PCs.
Two options are available for the connection between the PC and measurement computer:

— Via the infrared interface on the front (with optical head)
— Via the M-Bus interface (with M-Bus repeater)

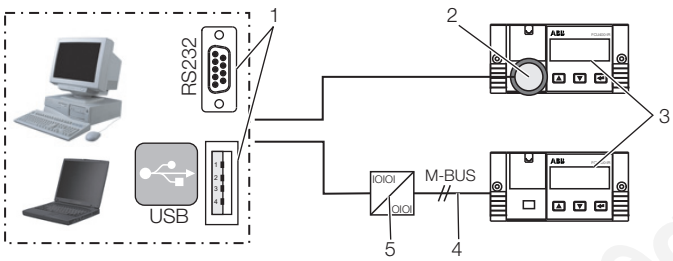

Fig. 11
1 RS232 / USB interface | 2 Optical head | 3 Measurement computer | 4 M-BUS connection (2-wire) | 5 M-BUS repeater

Note on communication:
The following settings must match on the PC and on the device (under "Device data"):
Bus address, baud rate, interface.

Interface	Setting
With optical head	Optical head / automatic
With M-Bus repeater	M-Bus repeater

7.3.1 Infrared printer

The infrared interface can be used to print out measurement computer data on the portable "HP82240B Infrared Printer".

Email:3007273136@qq.com Tel:86-18050025540

8 Error messages

8.1 Process errors

Process errors that have a direct effect on totalizing are indicated by the flashing message "Error" and the "■" icon on the toolbar of the LCD display.
It is possible to view a plain-text description of the error in the "Error messages" menu.
The table below contains a list of possible error messages.

No.	Message	Description
1	Ta1 out of range	The measured temperature Ta1 is outside the configured measuring range.
2	Tmx > high limit	The measured temperature Twarm is outside the configured measuring range (0 … 250 °C). Check that the sensor is working correctly.
3	T1 … T12 out of range	The measured temperatures of infrared sensors 1 … 12 are outside the configured measuring range.

8.2 Device error

The internal device errors are binary-coded. The errors are displayed in the form of 4-digit numbers.

Error code	Description
0000	No error
0001	Configuration error (physical, electrical, min. / max. value)
0002	Unit configuration error
0004	Display parameter configuration error
0010	Flowmeter type error (not in the case of FCU400-IR)
0020	Critical process error
0100	Extension module 1 error
0200	Extension module 2 error
0400	Extension module 3 error
0800	Extension module 4 error

If multiple errors occur at the same time, each individual digit of the error codes is added together.

Error code	Errors
0004	Display parameter configuration error
0801	Extension module 4 error and configuration error (physical, electrical, min. / max. value)
0534	Extension module 1 and 3 error (1 + 4 added together at second digit), critical process error (1 + 2 added together at third digit), and display parameter error.

Email:3007273136@qq.com
Tel:86-18050025540

9 Technical Data

9.1 System structure

The measurement computer consists of a basic device with four slots for extension modules.
The basic device contains:

- Power supply unit
- LCD display with backlighting
- Processing electronics
- 1 analog input for Pt100 temperature sensor with constant power source for four-wire circuit
- 2 digital, electrically isolated inputs for pulse or frequency signals; can also be used for logic signals for control purposes
- 3 digital, electrically isolated outputs for pulse output and error signaling
- M-Bus interface
- Optical interface on front, which can be operated in accordance with the IRDA or ZVEI standard, depending on the parameterization.

The four slots are designed to accommodate extension modules. You have the option of combining the following modules:

- Voltage input module, 4 inputs
- Current output module with limit monitors
- RS485 / RS232 module for MODBUS communication

9.2 Electrical connections

9.2.1 Analog inputs

1 x Pt100 IEC,
measuring range -200 … 850 °C,
resolution 20 bits ≈ 0.0012 K

9.2.2 Digital outputs AB1, AB2, and Err

3 x open collector, passive. Electrically isolated via optocoupler.

External supply	In acc. with VDE 2188, Category 2
Maximum load	24 VDC (± 25 %), < 100 mA
Maximum insulation voltage	500 V_{SS} (peak-to-peak)
Internal resistance R_i in conductive state	< 20 Ω
Function	AB1: Pulse output (alarm) AB2: Pulse output (pre-alarm) Err: Error output

9.2.3 Communication interfaces

Communication takes place via the M-Bus protocol in acc. with EN 1434-3, IEC 870-5.

Optical interface on the front of the device	Electrical interface via terminal strip of device
Operating mode can be parameterized, optical head (ZVEI) standard in acc. with IEC EN 61107 (300 ... 400 (9,600) baud).	— 2-wire M-Bus interface (300 ... 38,400 baud) — RS232 / RS485 (300 ... 38,400 baud)

The device parameters are set by means of the FCOM200 parameterization software (ParaTool).
Data (operating variables, data logger, etc.) is read out via M-Bus or MODBUS.

9.3 Power supply

DC voltage	24 V DC ± 5 %
Power consumption 24 V AC	1 ... 10 VA depending on extension

9.4 Extension modules

The extension modules are inserted in the slots on the basic device.

Module designation	Description
107 4 x voltage inputs (EX1 … EX4)	0 ... 2,500 mV, R_E > 1 MΩ, resolution 16 bits, max. permissible input voltage + 5 V
102 2 x analog outputs (AX1, AX2) 2 x limit monitors (ABX1, ABX2)	Signal range 0 / 4 ... 20 mA, load max. 500 Ω, open permitted, short circuit-proof Open collector, passive Electrical isolation via optocoupler. External supply VDE 2188, Category 2. Maximum load 24 V (+ 25 %), < 100 mA. Max. insulation voltage 500 V (peak-to-peak).
105 RS485 / RS232 card	For MODBUS communication

Email: 3007273186@qq.com
Tel: 86-18050025540

9.5 Characteristic values

Temperature inputs	
Temperature measuring error	0.3 % of measuring range end value
Measuring error for differential temperature	3 … 20 K, < 1.0 % of measured value 20 … 250 K, < 0.5 % of measured value

Current outputs	
Effect of ambient temperature	< 0.01 %/K
Calibration error	< 0.2 % of end value
Maximum linearity error	< 0.005 % FSR
Accuracy class of calculator	EN 1434-1 / OIML 75 Class 2

9.6 Ambient conditions

Ambient temperature	-5 … 55 °C (23 … 131 °F)
Storage temperature	-25 … 70 °C (-13 … 158 °F)
Climate class	Ambient temperature class C acc. to EN 1434-1
Relative humidity	Checked in acc. with EN 1434-4, IEC 62-2-30
Condensation	Permissible
Degree of protection	IP 65 IP 40 (only in the case of FC400-IR)
Shock resistance during operation (at 20 °C) in acc. with IEC 68-2-6 or 68-2-27	Vibration: 2 g / 10 ... 150 Hz Shock: 30 g / 11 ms / 3 shocks

9.6.1 Electromagnetic compatibility (EMC)

Interference immunity in acc. with EN 50082-2 (EN 6100-4-2, -3, -4, -5, 6); also in acc. with EN 1434-4 (Class C), RFI suppression in acc. with EN 50081-2 (EN 55011 Class A)

Type of test	Standard	Testing accuracy	Effect
Surge on power supply AC com diff.	EN 61000-4-5	 2 kV 1 kV	 No effect No effect
Burst on supply lines	EN 61000-4-4	2 kV	< 0.2 %
Burst on signal lines	EN 61000-4-4	1 kV	< 0.2 %
Discharge of static electricity (contact discharge)	EN 61000-4-2	6 kV	< 0.2 %
Radiated field (80 … 1,000 MHz)	EN 61000-4-3	10 V/m	< 0.2 %
Cable-guided radiation (150 kHz … 80 MHz)	EN 61000-4-6	10 V	Requirements met
Line interruptions and fluctuations	EN 61000-4-411	-	-
RFI suppression	Limit value class adhered to		
Interference voltage on supply line	EN 55022	A	
Interference field strength	EN 55022	B	

9.7 Operation

9.7.1 Display

LCD display, 120 x 32 pixels, multi-line, with backlighting.

9.7.2 Billing date recording

Two billing dates can be determined for the purpose of storing all counter readings. The date and time parameters can be adjusted independently for each billing date.

9.7.3 Data logger

The integrated data logger features 128 or 200 slots and has a ring buffer design. The data logger stores the process variables (counter readings, instantaneous values, min. / max. and mean values).
Depending on the application concerned, the number of operating variables and slots may vary.

9.8 Error messages

The measurement computer enables internal errors to be detected thanks to regular self-diagnostics.

— Critical device errors; e.g., storage failure, process errors
— Power supply failures; meter standstill.

The 10 most recent process errors are stored and can be called up as plain text with a time stamp via the LCD display.

9.8.1 Err error output

Open collector, passive

9.9 Mounting dimensions

DIN rail mounting and wall mounting	
Dimensions (width x height x depth)	144 mm x 72 mm x 183 mm (5.67 inch x 2.83 inch x 7.2 inch)
Housing material	Polycarbonate
Weight	Approx. 0.7 kg (1.54 lb)

Panel mounting	
Dimensions (width x height x depth)	144 mm x 72 mm x 117 mm (5.67 inch x 2.83 inch x 4.61 inch)
Panel cutout (width x height)	139 mm x 69 mm (5.47 inch x 2.72 inch)
Housing material	Polycarbonate
Weight	Approx. 0.5 kg (1.1 lb)

9.10 Infrared sensors CS

9.10.1 General information

Float head degree of protection	IP65 (NEMA-4)
Ambient temperature	-20 … 75 °C (-4 … 167 °F)
Storage temperature	-40 … 85 °C (-40 … 185 °F)
Relative humidity	10 … 95 %, non-condensing
Material	Stainless steel
Dimensions	M12 x 1, 85 mm (3.35 inch) long
Weight	58 g (0.19 lb)
Cable length / diameter	10 m (32.8 ft) / 4 mm (0.16 inch)
Vibration in acc. with IEC 68-2-6	3 G, 11 … 200 Hz, each axis
Shock in acc. with IEC 68-2-27	50 G, 11 ms, each axis
EMC	In acc. with 89/336/EEC

9.10.2 Measurement-related data

Temperature range (can be scaled using software)	-20 … 350 °C (-4 … 662 °F)
Spectral range	8 … 14 µm
Optical resolution	15:1
Measurement uncertainty [1]	±1.5 °C (±2.7 °F) or 1.5 % of measured value (the higher value in each case applies)
Reproducibility [1]	±0.75 °C (±1.35 °F) or ±0.75 % of measured value (the higher value in each case applies)
Temperature resolution [2]	0.1 K
Response time	30 ms … 2 s (95 % signal, can be set using software)
Warm-up time with a power supply of ≥ 24 V DC	10 minutes
Emittance / Gain	0.1 … 1.1 (can be set using software or 0 … 5 V DC input)
Transmittance	0.100 … 1.100 (can be set using software)
Interface (optional)	USB, via programming adapter
Signal processing	Mean value, minimum value, maximum value (can be set using software)
Software (optional)	CSconfig, Thermal Oscilloscope

1 At an ambient temperature of 23 °C, ±5 °C
2 NETD for object temperatures of > 100 °C (> 212 °F) and a time constant of > 0.2 s

9.10.3 Electrical data

Output (terminal, wire color)	(only one or the other may be selected at any one time)
— Analog (OUT, yellow)	0 … 5 V DC [1] or 0 … 10 V DC [2], scalable
— Serial interface [3] (OUT / IN, green)	Unidirectional (burst mode) or bidirectional
— Alarm output (OUT, green)	Normally open or normally closed, can be adjusted
Additional functions	— Alarm LED — Aiming support with LED
Output impedance	At least 10 kΩ
Programmable function input (IN, green)	
— External emittance setting	0 V DC; ε = 0.1 5 V DC; ε = 1.1
— Ambient temperature compensation	0 V DC; -20 °C 5 V DC; 350 °C
— Trigger (stop function reset)	5 V DC
Power supply	5 … 30 V DC, 9 mA

1 0 … 4.6 V DC with a supply voltage of 5 V DC
2 Only with a supply voltage of > 11 V DC
3 Inverted RS232 signal, TTL level, 9.6 kBaud

9.10.4 Declaration of conformity

The infrared sensor conforms to the following standards:

EMC	EN 61326-1
Safety	EN 61010-1:1993/A2:1995

The infrared sensor meets the requirements of EMC Directive 89/336/EEC and Low Voltage Directive 73/23/EEC.

9.10.5 Factory setting

The sensor is supplied with the following settings made:

Temperature range	0 … 250 °C
Output signal	0 … 2.5 V
Emittance	0.95
Transmittance	1.0
Averaging	0.2
Ambient temperature source	Head temperature
Limit value	95 °C
Pre-alarm at	90 °C
Main alarm at	95 °C

10 Maintenance / Repair

10.1 Replacing the fuse

WARNING – Live connections!
Risk due to exposed live connections when device is open.
- Before opening the device, switch off the power supply.
- Condensers in the device will be live even after the power supply has been switched off.
- Only suitably trained specialist personnel may carry out work on the device.

NOTICE – Potential damage to device!
Damage to device due to static electricity (ESD). Make sure that ESD protection measures are in place when working on the device.

IMPORTANT (NOTE)
The calibration seal is broken during the process of replacing the fuse.

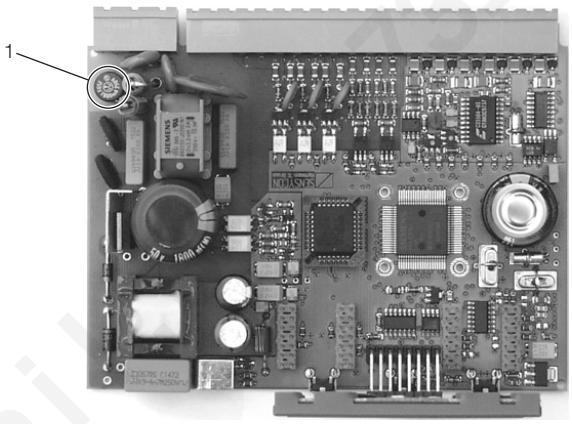

Fig. 12: Position of the fuse
1 Fuse

Power supply	Fuse
24 V AC / DC	0.8 A

1. Switch off and remove the device.
2. Separate the device from the base (only in the case of DIN top-hat rail installation).
3. Unscrew the fixing screws from the rear panel and remove the rear panel.
4. Pull out the main board.
5. Replace the fuse (making sure you are using the correct type).
6. Insert the main board in the housing.
7. Replace the rear panel and screw it in place.
8. Place the measurement computer on the base and secure it using the fixing screws (only in the case of DIN top-hat rail installation).
9. Install the device.

10.2 Cleaning the infrared sensors

NOTICE – Damage to infrared sensor!
Damage to infrared sensor due to cleaning agents containing solvents.
Only clean the infrared sensor using water-based cleaning agents that do not contain solvents.

Blow away any loose dirt (such as dust) using dry compressed air.
Clean the lens surface of the infrared sensors using a soft, slightly damp cloth. Water or water-based glass cleaner may be used to dampen the cloth.

Email:[redacted] Tel:86-18050025540

11 Appendix

11.1 Approvals and certifications

CE

The version of the device as provided by us meets the requirements of the following EU directives:

- EMC Directive 2004/108/EC
- Low Voltage Directive 2006/95/EC

IMPORTANT (NOTE)
All documentation, declarations of conformity, and certificates are available in ABB's download area.
www.abb.com/flow

Email:3007273136@qq.com
Tel:86-18050025540

EG-Konformitätserklärung
EC-Certificate of Compliance

CE

Hiermit bestätigen wir die Übereinstimmung der aufgeführten Geräte mit den Richtlinien des Rates der Europäischen Gemeinschaft, welche mit dem CE- Zeichen gekennzeichnet sind.

Die Sicherheits- und Installationshinweise der Produktdokumentation sind zu beachten.

We herewith confirm that the listed devices are in compliance with the council directives of the European Community and are marked with the CE- marking. The safety and installation requirements of the product documentation must be observed.

Hersteller: *Manufacturer:*	ABB Automation Products GmbH, Dransfelder Straße 2, 37079 Göttingen - Germany
Gerät: *Device:*	Universeller Messrechner *Universal Measuring Computer*
Modelle.: *Models:*	SensyCal FCU200-T, FCU200-W SensyCal FCU400-G, FCU400-IR SensyCal FCU400-P, FCU400-S
Produktnummer: *Models:*	V18022-...
Richtlinie: *Directive:*	2004/108/EG * (EMV) *2004/108/EC * (EMC)*
Europäische Norm: *European Standard:*	EN 61326-1, 10/2006 * EN 61326-2-3, 05/2007 * *EN 61326-1, 10/2006 * EN 61326-2-3, 05/2007 *
Richtlinie: *Directive:*	2006/95/EG * (Niederspannungsrichtlinie) *2006/95/EC * (Low voltage directive)*
Europäische Norm: *European Standard:*	EN 61010-1, 01/2009 * *EN 61010-1, 01/2009 *

* einschließlich Nachträge / *including alterations*

Göttingen, 01. Dezember 2011

i.V. Klaus Schäfer
(QM Manager)

i.V. Dr. Günter Kuhlmann
(R&D Manager)

BZ-13-5113
Rev.01

ABB Automation Products GmbH

Postanschrift:
Dransfelder Str. 2
D-37079 Göttingen

Besuchsanschrift:
Dransfelder Str. 2
D-37079 Göttingen

Telefon +49 551 905 0
Telefax+49 551 905 777
Internet: http://www.abb.com/de

Email: 3072731360@qq.com
Tel: 86-18030025540

Statement on the contamination of devices and components

Repair and / or maintenance work will only be performed on devices and components if a statement form has been completed and submitted.
Otherwise, the device / component returned may be rejected. This statement form may only be completed and signed by authorized specialist personnel employed by the operator.

Customer details:

Company:	
Address:	
Contact person:	Telephone:
Fax:	E-Mail:

Device details:

Typ:	Serial no.:
Reason for the return/description of the defect:	

Was this device used in conjunction with substances which pose a threat or risk to health?

☐ Yes ☐ No

If yes, which type of contamination (please place an X next to the applicable items)?

Biological	☐	Corrosive / irritating	☐	Combustible (highly / extremely combustible)	☐
Toxic	☐	Explosiv	☐	Other toxic substances	☐
Radioactive	☐				

Which substances have come into contact with the device?

1.
2.
3.

We hereby state that the devices / components shipped have been cleaned and are free from any dangerous or poisonous substances.

Town/city, date Signature and company stamp

Email:3007273236@qq.com
Tel:86-18050025540